Zero-Emission
Fuel Cell Electric
Heavy-Duty Truck

ZEV T680 Class 8 Prototype **Emergency Response Guide** for CARB ZANZEFF Project

TABLE OF CONTENTS

Foreword

This guide provides information to assist emergency responders in safely responding to incidents involving a Toyota/Kenworth Fuel Cell Electric Truck.

The illustrations used in this guide are representative examples.

Toyota/Kenworth thanks emergency response professionals for their concern and efforts in protecting Toyota/Kenworth drivers and the general public.

Reading This Manual

Symbols	Meanings
 WARNING	■ Explains something that, if not obeyed, could cause death or serious injury to people.
 NOTICE	■ Explains something that, if not obeyed, could cause damage to or a malfunction in the truck or its equipment.
 NOTE	■ Explains things not found in the explanations of functions or operation methods, or other convenient-to-know items.
	■ Indicates a description for components that are subject to unintended deployment, operation, potential explosions, or parts that may fly off .
	■ Indicates a description for components that may cause electric shock.
	■ Indicates a description for components that may leak.

Fuel Cell Electric Truck Identification

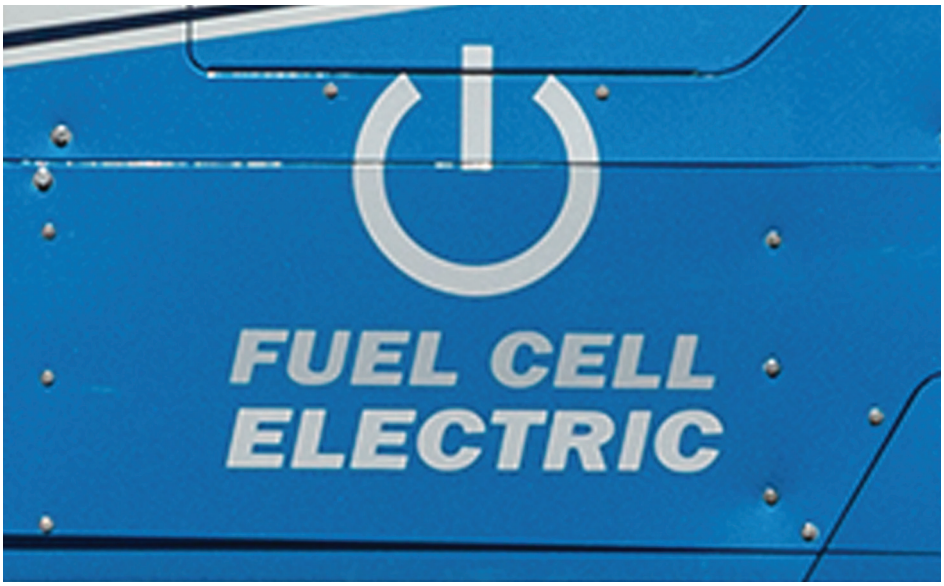

Fuel Cell Electric Trucks can be identified by exterior logos and wrapping on the body of the truck, including “FUEL CELL ELECTRIC” wrapping on the side of the cab and “ZERO EMISSIONS” wrapping near the top of the cab.

When responding to the scene of an emergency with a Toyota/Kenworth fuel cell electric truck, emergency response personnel may also notice the following important exterior components.

① Cabinet doors for Compressed Hydrogen Storage System (CHSS)

② Traction battery compartment/panel

③ Fuel door and receptacles

④ 12 Volt Battery disconnects

① Cabinet doors for Compressed Hydrogen Storage System (CHSS)

② Traction battery compartment/panel

③ High voltage power distribution box

High Voltage System

The fuel cell electric truck uses motors driven by high voltage electricity (over 144 V, up to 650 V) to generate the driving torque. These vehicles are equipped with high voltage electrical components as well as high voltage power cables, distinguished by orange casings.

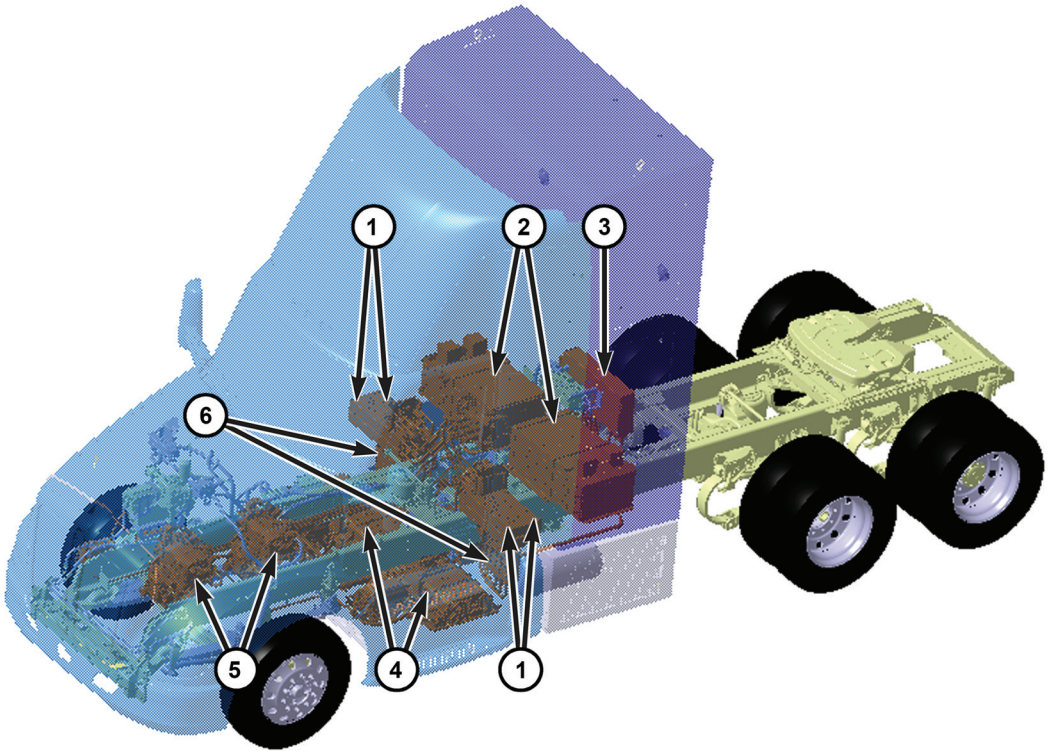

1. High voltage bi-directional boost converters
2. High voltage batteries
3. High voltage power distribution box
4. Fuel cell stacks
5. Power control units
6. Motor inverters

Fuel Cell (FC) System

Fuel cell electric trucks use power generated from a chemical reaction between the hydrogen fuel and oxygen in the air. To use hydrogen for power generation, fuel cell electric trucks are equipped with hydrogen cylinders, hydrogen pipes, and fuel cell stacks, as well as other hydrogen dedicated high voltage components.

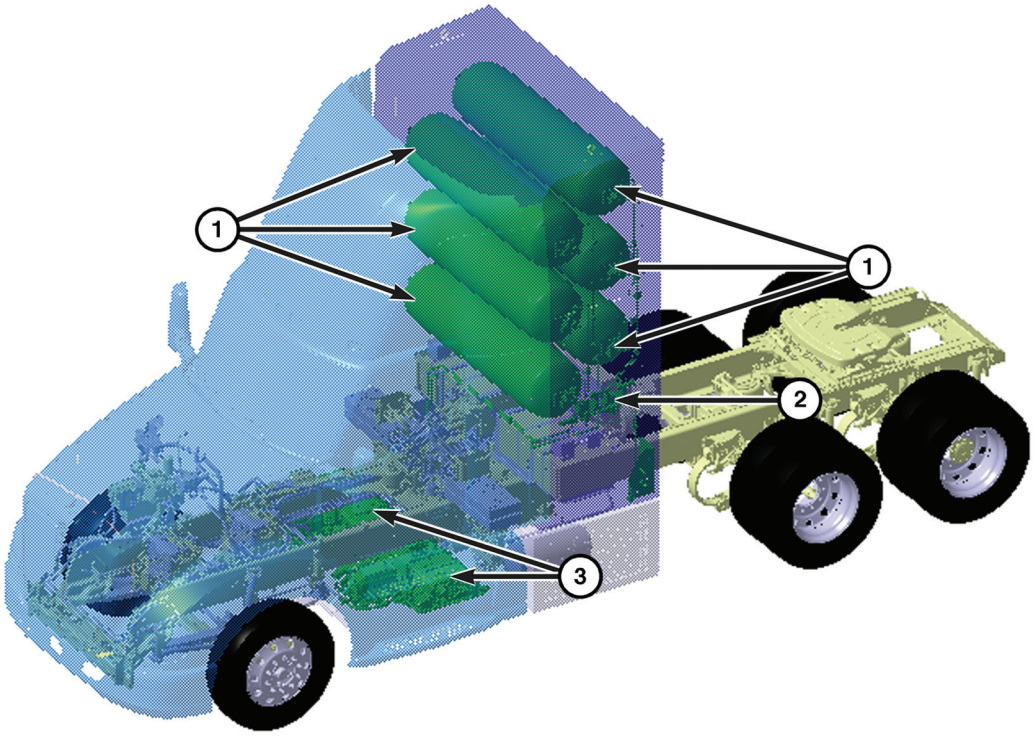

① Compressed Hydrogen Storage System (CHSS) cylinders

② Hydrogen lines

③ Fuel cell stacks

Key Components

High Voltage Power Cables

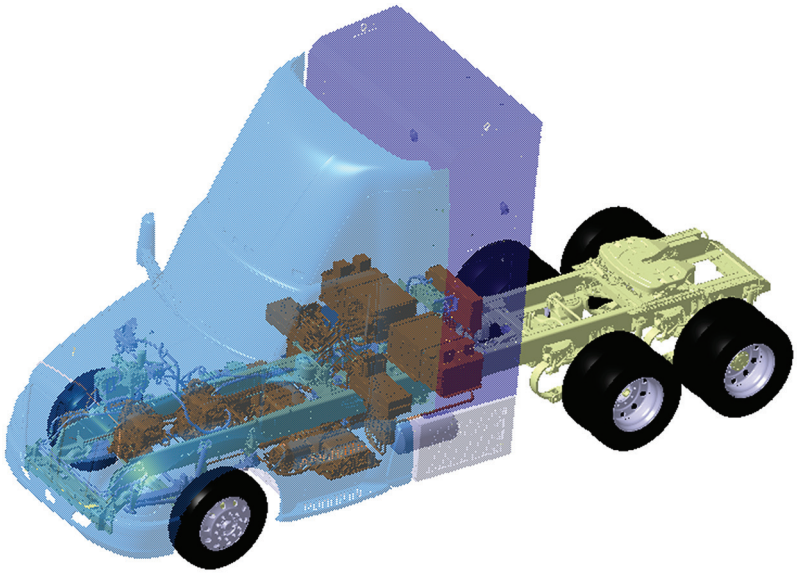

High voltage flows through heavy-duty power cables, connecting the high voltage components. High voltage cables are indicated by an orange color and are installed in the underhood compartment and toward the center of the truck (routed through the inner chassis below the cab) or on either side away from the cab and lower panels.

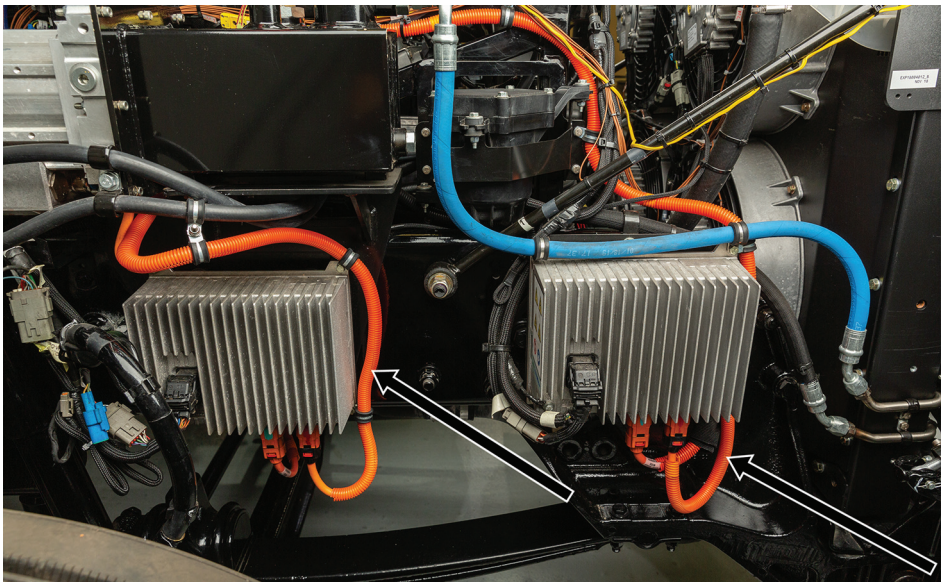

High Voltage Battery

The fuel cell electric truck has 2 high voltage lithium-ion batteries (traction batteries) with a typical maximum voltage of 300 V. Normally hidden from view, the high voltage batteries are located outside the cabin behind panels at the lower rear corner of the truck.

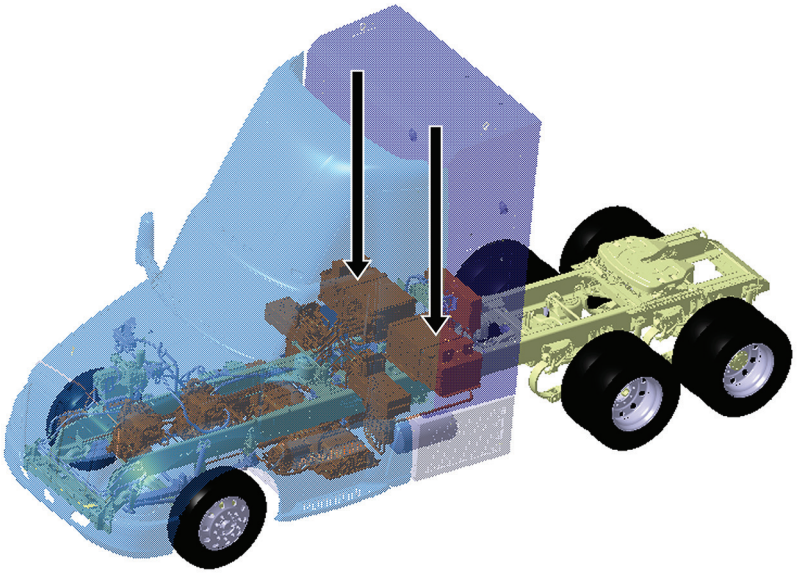

The battery electrolyte is sealed inside the high voltage battery, and a crash causing large amounts of electrolyte to spill is highly unlikely. There are 2 service plugs (300 V) located on top of each battery.

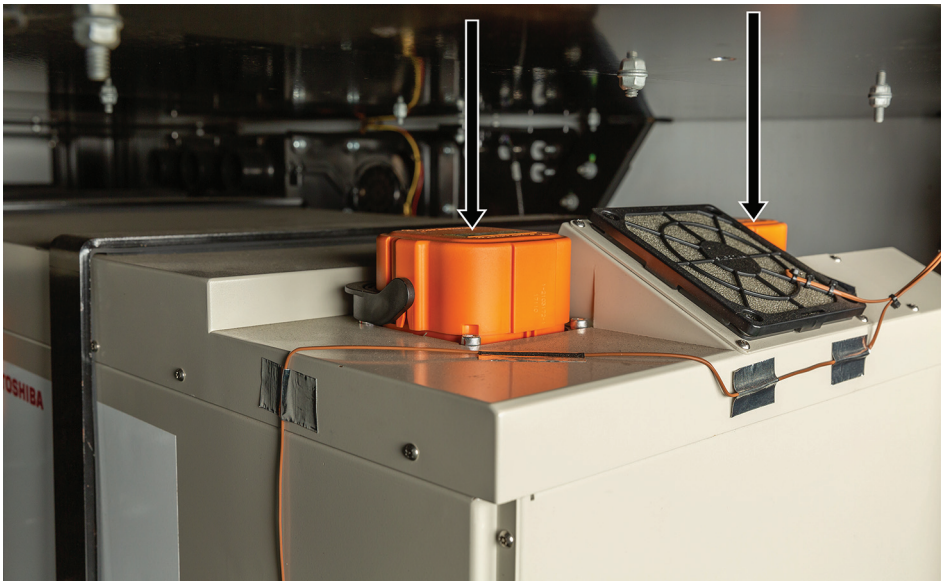

12 Volt and 48 Volt Battery

In an emergency situation, it may be necessary to disconnect the 12 V and 48 V batteries. The battery disconnect is located between the steps on the driver's side. Remove the fairing cover to access the compartment.

There are two 12 V batteries (Main and Sub) and a single 48 V battery. The Main and Sub 12 V batteries both have dedicated positive and negative terminals on the disconnect panel. Fuses for the 12 V system are located in the center fuse boxes in the underhood compartment.

High Voltage System Safety

The High Voltage (HV) battery assemblies power the high voltage electrical system with DC electricity. Positive and negative orange colored high voltage power cables are routed from the HV battery assemblies to the inverters/converters. The inverters/converters contain a circuit that boosts the HV battery voltage from 300 to 650 Volts DC. The inverters/converters create 3-phase AC to power the motor. Power cables are routed from the two converters to two inverters and then to each high voltage motor.

The following systems are intended to help keep occupants in the vehicle and emergency responders safe from high voltage electricity:

- High voltage fuses provide short circuit protection in the HV battery assembly.
- Positive and negative high voltage power cables connected to the HV battery assembly are controlled by 12 Volt normally open relays. When the vehicle is shut off and not charging, the relays stop electrical flow from leaving the HV battery assembly.
- Both positive and negative power cables are insulated from the metal body. High voltage electricity flows through these cables and not through the metal vehicle body. The metal vehicle body is safe to touch because it is insulated from the high voltage components.
- A ground fault monitor continuously monitors for high voltage leakage to the metal chassis while the vehicle is running. If a malfunction is detected, the “Fuel Cell Stop Warning” message will display on the multi-information display and the fuel cell may shut down if the malfunction becomes severe.”

WARNING

The high voltage system, including the charging system, may remain powered for up to 10 minutes after the vehicle is shut off, disabled, or charging stops. To prevent serious injury or death from severe burns or electric shock, avoid touching, cutting, or breaching any orange high voltage power cable or high voltage component.

Hydrogen Detectors

In case of hydrogen leakage, the hydrogen detectors equipped on the truck detect the hydrogen leak and shut off the supply of hydrogen by means of solenoid valves on the cylinders to prevent a mass leak. Also, hydrogen-related parts are located outside the cabin to allow leaked hydrogen to be easily diffused.

Hydrogen Safety Release Valves

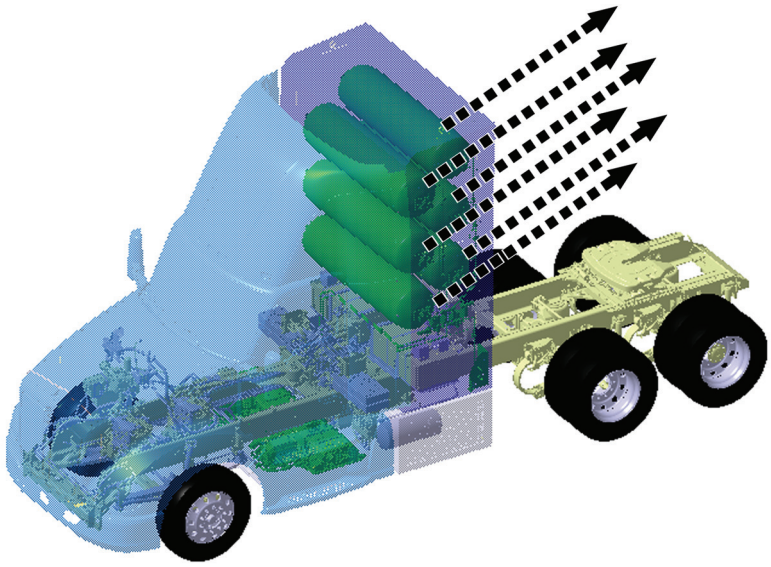

Each Compressed Hydrogen Storage System cylinder is equipped with a Thermally Activated Pressure Relief Device (TAPRD) in order to prevent an explosion in the rare event that the temperature of the hydrogen reaches abnormal levels due to a fire. The pressure relief device will open at 110°C (230°F) to release the hydrogen gas in the cylinder toward the rear of the cab at an upward diagonal. Note that if the valves open, a loud hiss or roar will be heard, and the hydrogen may catch fire as it is released.

WARNING

If the Thermally Activated Pressure Relief Devices open, stay a safe distance away from the truck until the hydrogen has dissipated.

Electric Shock

Unprotected contact with any electrically charged high voltage component can cause serious injury or death. However, The cases/covers of the high voltage electrical components are insulated from the high voltage conductors inside the components. The truck body is insulated from the high voltage electrical components, and is safe to touch during normal conditions.

High voltage electrical components may be indicated by markings on their case/cover. High voltage power cables are indicated by an orange color.

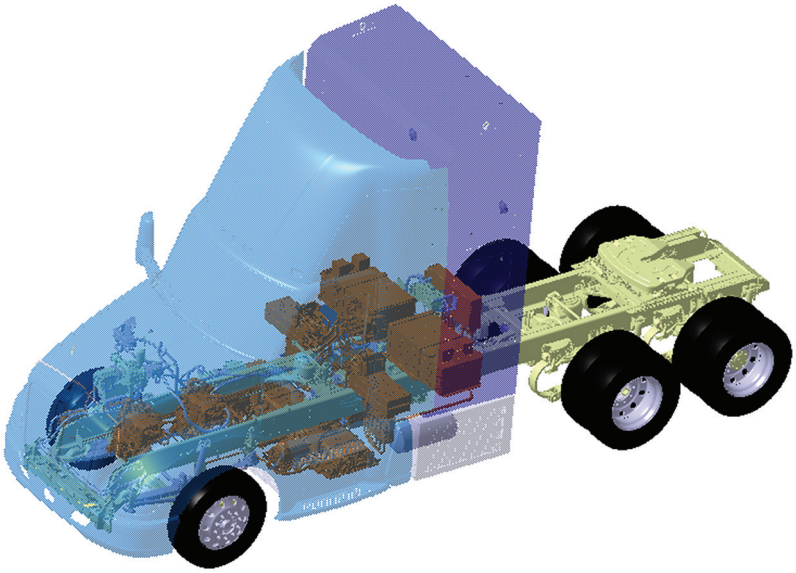

WARNING

If severe damage causes high voltage components to become exposed, responders should take appropriate precautions and wear appropriate insulated personal protective equipment. Do not cut or breach any orange high voltage power cable or high voltage component.

Spills

High Voltage Battery

A lithium ion (Li-ion) battery is used for the high voltage batteries. The battery cells are contained within a case with limited accessibility, and a catastrophic crash that would breach both the metal battery stack case and metal battery cells would be a rare occurrence. However, a damaged high voltage lithium-ion battery can emit toxic fumes and the organic solvent used as electrolyte is flammable and corrosive.

WARNING

The flammable organic electrolyte, which primarily contains carbonate ester, is harmful to the human body. Avoid contact with the high voltage battery electrolyte. Contact with the electrolyte or smoke and vapor from a burning battery will irritate the eyes, nose, throat, and skin. To avoid injury caused by coming in contact with the electrolyte or vapor, wear appropriate protective equipment such as rubber gloves, safety goggles, protective mask or self-contained breathing apparatus when there is a risk of touching electrolyte.

Hydrogen Coolant System

The fuel cell stack coolant is colorless, odorless, and transparent. It contains ethylene glycol in order to lower the freezing point. The coolant may be irritating to skin, eyes, and the respiratory tract, though systemic toxicity is unlikely through contact and vapor inhalation.

Compressed Hydrogen

The compressed hydrogen gas used in the fuel cell electric truck is colorless, odorless, and nontoxic. Hydrogen can ignite in a wide range of concentrations (4% to 76%), but is lighter than air and diffuses easily. A small leak would quickly dissipate to a concentration that cannot ignite.

WARNING

- If the sound of hydrogen leaking (a loud hissing sound) can be heard when working on the truck, immediately step away from the truck as there is a chance that the hydrogen gas may ignite.
- The hydrogen concentration around the truck should be measured with a gas meter calibrated to H_2. The flammability range of hydrogen is 4% to 76% (or 40,000 to 760,000 ppm). If the gas meter cannot be calibrated to H_2, please reference a relative response chart.
- Hydrogen flames are invisible. In addition, hydrogen burns very quickly and radiates less heat than gasoline or other fuels. If hydrogen fire is suspected, use a thermal imaging device to detect the fire.

Compressed Hydrogen Storage System (CHSS)

The Fuel Cell Electric Truck has six carbon fiber-wrapped, polymer-lined cylinders that are able to absorb five times the crash energy of steel. The Compressed Hydrogen Storage System is located in a cabinet outside the rear of the cabin (looks similar to a sleeper cab).

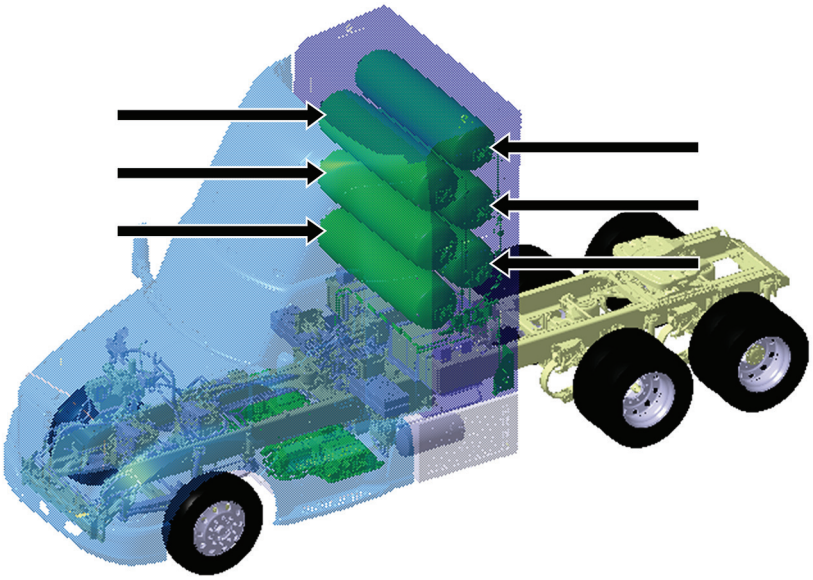

The Compressed Hydrogen Storage System cylinders are filled with high pressure hydrogen gas (nominal 10,153 psi (714 kgf/cm2, 70 MPa) at 15°C (59°F)) to supply the fuel cell stacks.

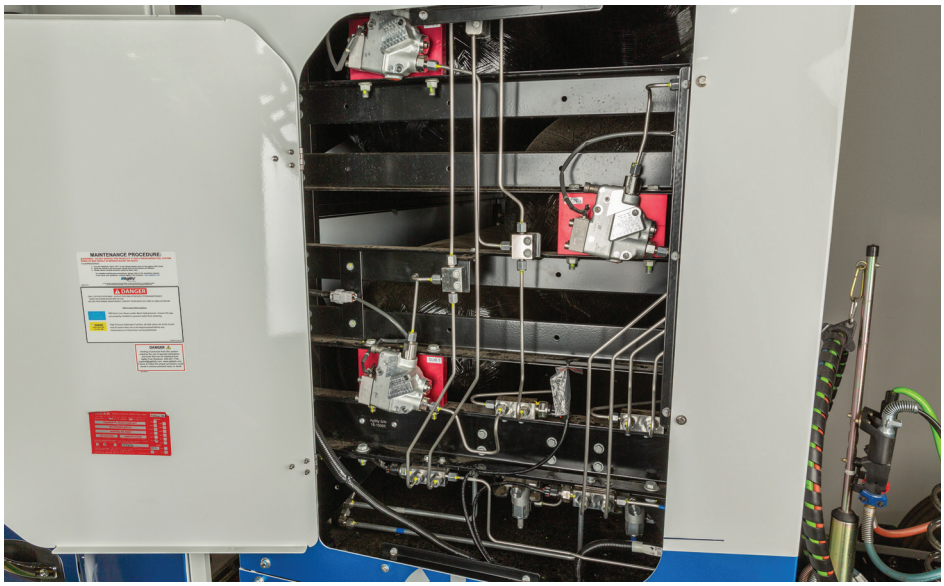

Hydrogen Pipes

The hydrogen pipes connect the hydrogen-related parts such as the fuel cell stacks and Compressed Hydrogen Storage System.

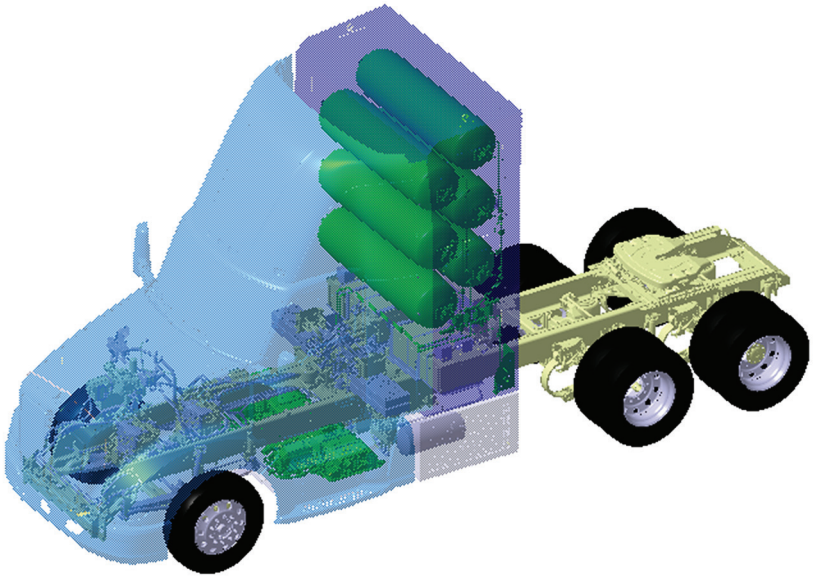

The hydrogen pipes are located in the rear cabinet and underneath the floor.

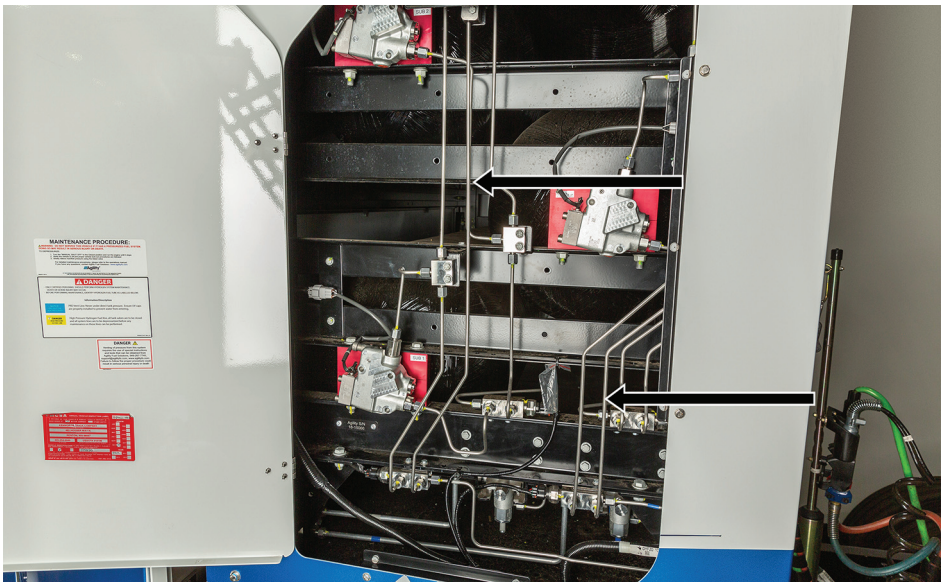

WARNING

In order to avoid fires and explosions, never cut or damage the Compressed Hydrogen Storage System, hydrogen pipes, or hydrogen-related parts.

Approaching the Truck

When approaching a hydrogen fuel cell electric truck at the scene of an emergency, responders should keep in mind special considerations regarding the hydrogen system and high voltage system.

Hydrogen System

Fuel cell electric trucks carry compressed hydrogen gas. Hydrogen gas is colorless, odorless and flammable, with a lower flammability limit of 4 % (40,000 ppm). Before performing the normal procedures to immobilize a truck, responders should confirm there is no significant hydrogen leakage or fire.

1. Confirm that there is no sound of hydrogen leakage (a loud hissing sound).
   - When approaching the truck, approach from the front at a 45 degree angle, as the hydrogen release valves vent toward the rear of the truck.
   - If the sound of leakage can be heard, immediately step away from the truck, as the hydrogen may ignite.
2. Using a combustible gas meter and relative response conversion chart, measure the hydrogen concentration around the truck. The lower flammability limit is 4% (40,000 ppm).
   - Measure the hydrogen concentration at regular intervals.
3. If a hydrogen fire is suspected, use a thermal imaging camera to detect any fire, as hydrogen flames are colorless and give off relatively little radiant heat.

High Voltage System

Fuel cell electric trucks are equipped with a high voltage electrical system (over 144 V, up to 650 V). When approaching a fuel cell electric truck, always check for evidence that the high voltage system has been compromised (arcing/sparking, orange cables cut or damaged, or significant traction battery compartment damage) before attempting to immobilize the truck.

WARNING

To prevent serious injury or death from severe burns or electric shock, avoid touching, cutting, or breaching any orange high voltage power cable or high voltage component. Wear appropriate protective equipment such as insulated gloves when there is a risk of touching high voltage power cables or high voltage components.

Submersion

Use caution approaching a submerged fuel cell electric truck. High voltage components may have been damaged prior to or during the submersion. Do not touch components that cannot be seen. Do not touch any orange high voltage cables or high voltage components. Attach recovery devices only to vehicle parts that are visible and where it is possible to verify that there are no high voltage components. Refer to the National Fire Protection Association Bulletin on Submerged Hybrid/Electric Vehicles at the end of this guide for further information.

WARNING

- A short circuit due to electrical corrosion (wiring and circuit boards become corroded due to an electrochemical reaction with water) may cause a vehicle fire after some time has elapsed.
- To prevent a vehicle fire, avoid turning the ignition switch or power switch of a submerged vehicle to ACC or ON.
- Touching exposed orange high voltage power cables or high voltage components such as the high voltage battery may cause electrical shock due to a change in electrical potential.
- Never remove a submerged service plug from the high voltage batteries or fuel cell stacks.

Fire

During the initial attack on a fire, extinguish the fire with copious amounts of water. This will also cool down the truck.

High Voltage System

Extinguish the fire with copious amounts of water to cool down the high voltage battery.

WARNING

- It is recommended to allow the high voltage battery to burn itself out if it judged that it is difficult to apply copious amounts of water to the high voltage battery.
- If only a small amount of water is used to extinguish a fire, a short circuit may occur in the high voltage battery, causing the fire to reignite.
- The vehicle should be monitored post fire to verify there is no re-ignition.

Hydrogen System

If there is an external fire, prevent the fire from spreading and reaching the truck. If fire has reached the Compressed Hydrogen Storage System, do not spray water on the Compressed Hydrogen Storage System if engulfed in flames, as it may cool the Thermally Activated Pressure Relief Devices (TAPRD's). When dousing the truck, keep a distance of at least 10.0 meters (32.8 feet) in case the hydrogen ignites.

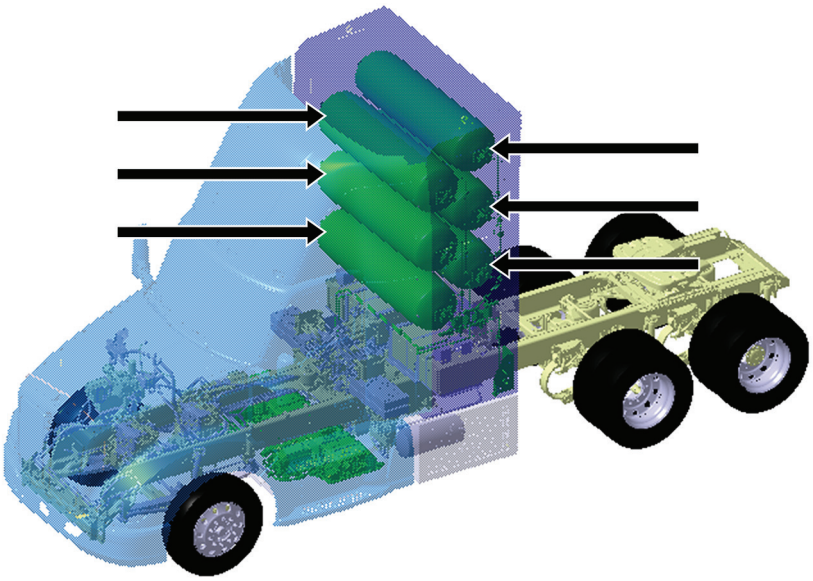

If a hydrogen fire is suspected, test with a thermal imaging camera. A pure hydrogen fire is colorless and is not visible. However, in a vehicle fire, other flammable materials may also burn, allowing the fire to be visible. The temperature of a hydrogen fire itself is very high, but the amount of heat that radiates from the flame is small. It is unique in that it is difficult to feel the heat even in close proximity.

WARNING

If the hydrogen is on fire, extinguishing the hydrogen flame completely could cause unburned hydrogen to accumulate and lead to a secondary explosion. Therefore, spray water to prevent the flame from spreading to surrounding areas, then wait for the hydrogen flame to naturally burn itself out.

Immobilization

Immobilization Procedure

Completely immobilize the truck by following these procedures to ensure safe emergency response operations.

1. Set the parking brake (Pull the yellow diamond-shaped knob on the dash controls).

2. Rotate the end of the shift lever to the Neutral (N) position.

3. To facilitate emergency response operations, lower the windows, unlock the doors and take other necessary actions before shutting off the truck.
4. Turn ignition off.

NOTE

- The ignition switch operates as follows:
  - Accessory → Ignition Off → Ignition On → Start.
- When in "Accessory" mode, the radio and other accessory components are operational.
- When in "Ignition-On" mode, the power windows, wipers, heater/air conditioner fan and other components are operational.

5. Chock wheels and stabilize the truck as necessary.

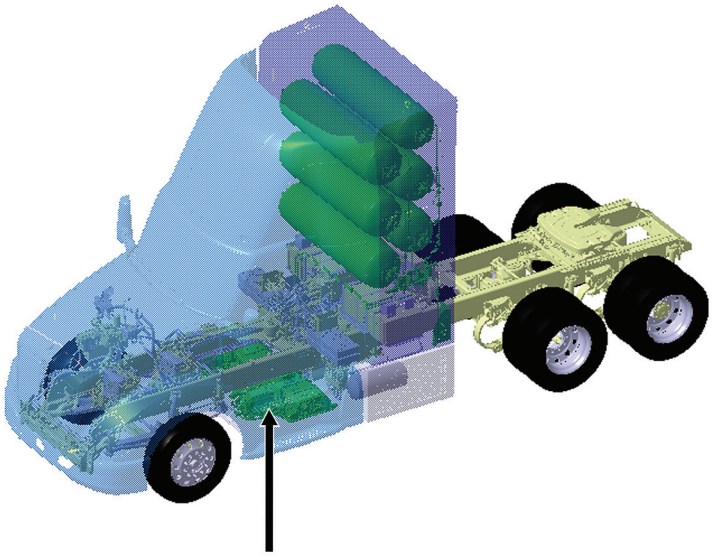

WARNING

Do not stabilize the truck with cribbing underneath the fuel cell stacks, as damage to the fuel cell stacks may occur.

High Voltage Shutdown

High Voltage System

There are no engine sounds in a fuel cell electric truck. Be aware that the electrical system may be on even if the truck is silent.

WARNING

- First response operations should only begin after shutting down the high voltage system. Failure to properly shut down the high-voltage system could result in serious injury or death from electrical shock or fires.
- The high voltage system may remain energized for up to 10 minutes after the truck is shut off and disabled
- To prevent serious injury or death from severe burns or electric shock, avoid touching, cutting, or breaching any orange high voltage power cable or high voltage component. Wear appropriate protective equipment such as insulated gloves when there is a risk of touching high voltage power cables or high voltage components.

There are crucial indicators on the instrument panel for determining when the high voltage system is active:

- The multi-information display in the center dashboard reads “Ready to Drive” and a green dash arch indicator in the tachometer indicate the high voltage system is active.

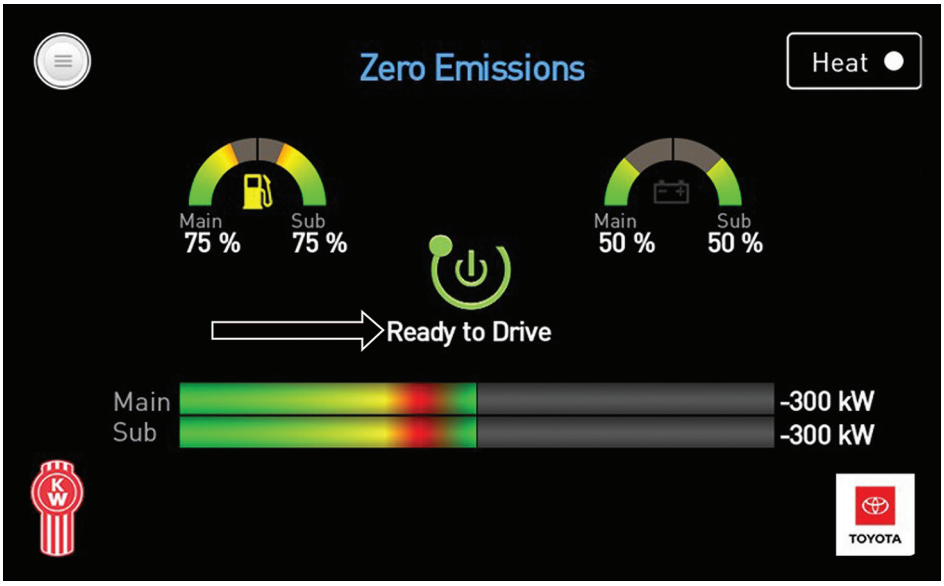

- The high voltage system is deactivated when the ignition switch is turned to “OFF” or the 12 V and 48 V batteries are disconnected.
- When the high voltage system is deactivated, the multi-information display turns off, and the green dash arch indicator is deactivated.

Disable Procedures

Completely disable the truck by using one of the following procedures.

- **Primary procedure**

1. Turn ignition off.

NOTE

- The ignition switch operates as follows:
  – Accessory → Ignition Off → Ignition On → Start.
- When in "Accessory" mode, the radio and other accessory components are operational.
- When in "Ignition-On" mode, the power windows, wipers, heater/air conditioner fan and other components are operational.

2. Access the 12 V and 48 V battery compartment between the driver side steps by removing the fairing cover.

3. Disconnect battery power by turning the disconnect switches a quarter turn counter clockwise until they are horizontally aligned. With the ignition off and the batteries disconnected, the high voltage and hydrogen systems are shut down.

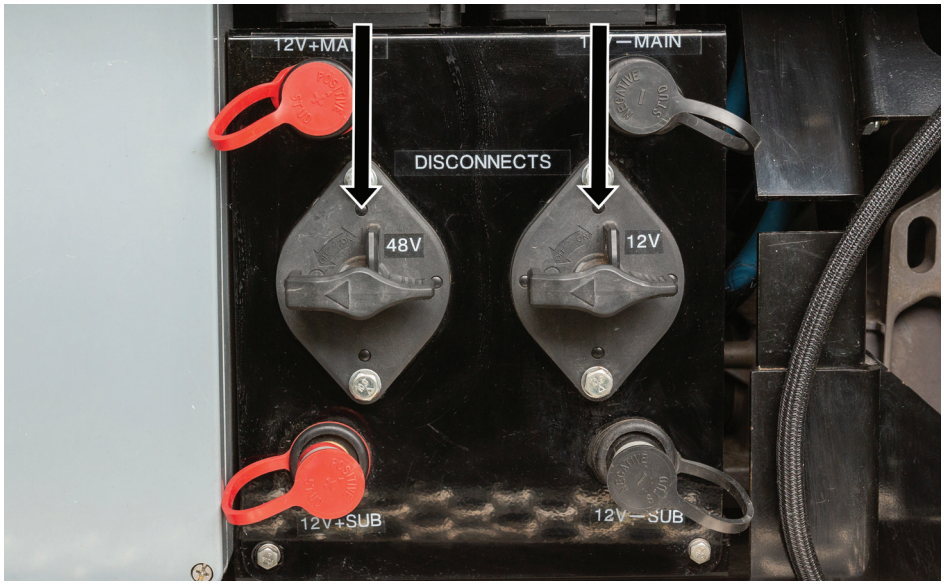

- **Procedure 2 (Alternate if the ignition switch is damaged or inoperative)**

1. Open the battery access door (see procedure 1)

2. Disconnect batteries using the disconnects.

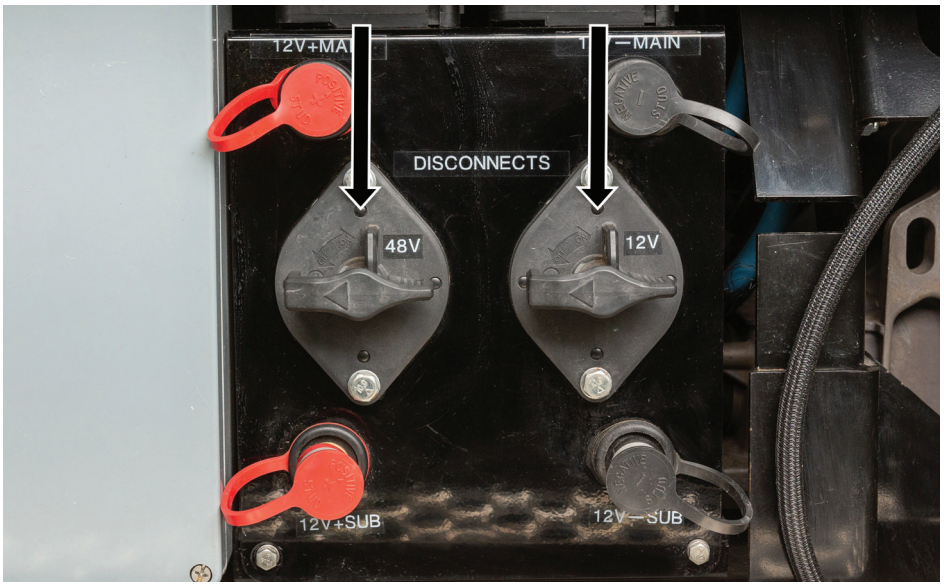

3. Open the hood.
4. Remove the under hood compartment fuse box covers.

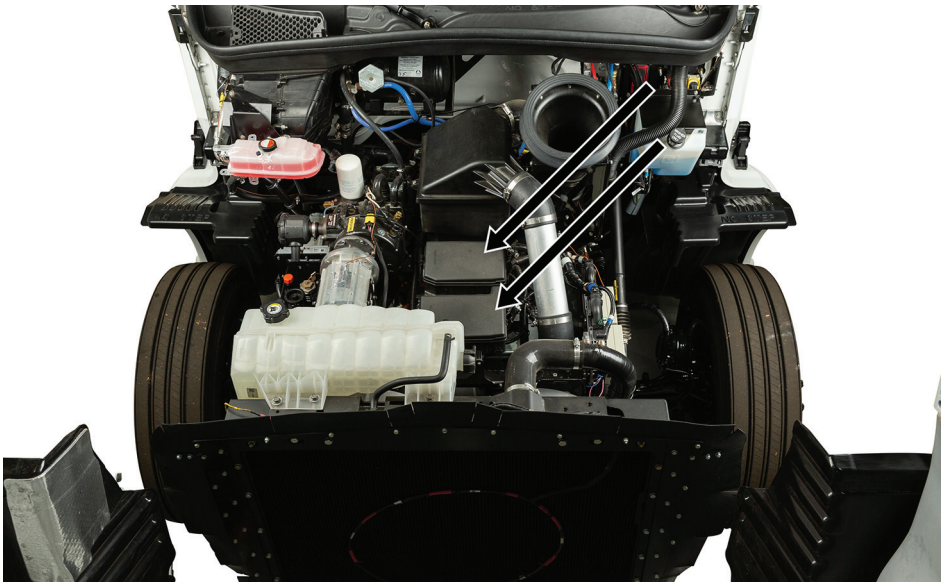

5. Remove the IGCT relay from both the Main and Sub fuse boxes.

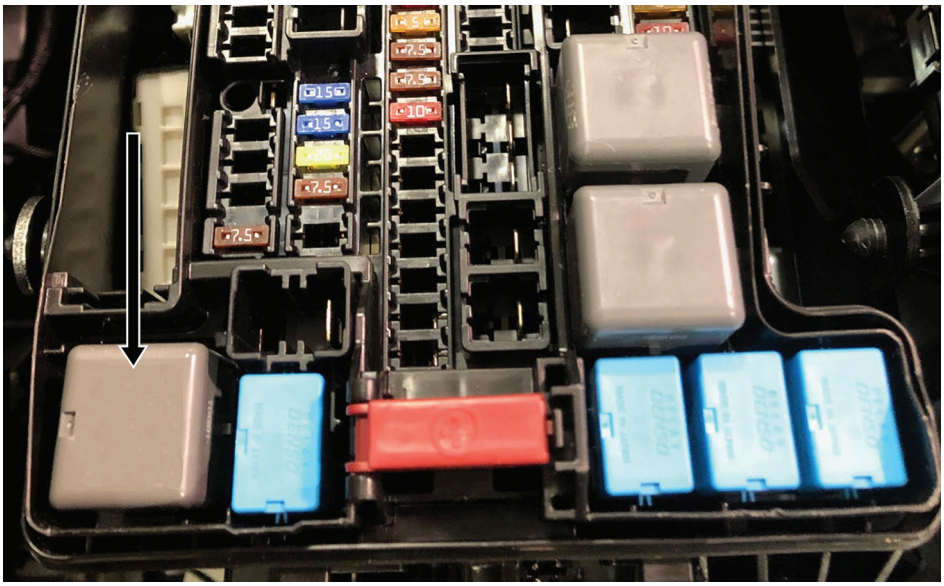

NOTE

If the correct fuse cannot be identified, pull ALL fuses in the fuse box until all of the following conditions are met.

- Multi-information display in the dashboard and green arch indicator in tachometer are off.
- Compressor and pumps are not running.
- Meters are turned off.
- Air conditioning is turned off.
- Audio system is turned off.
- Wipers are turned off.
- Navigation and other displays are turned off.

Hydrogen Fueling Shutdown

In order to abort refueling, follow the steps below.

1. Use the “STOP” button on the face of the fueling station.

2. If using the “STOP” button is not possible, operate one of the multiple emergency shut-off buttons located at various positions around each fueling station.

3. Hydrogen inside the hose will depressurize (pressure indicator turns blue) and the fueling nozzle can now be removed.

4. Slide the coupling back to remove the fueling nozzle from the fueling port.

NOTE

Stations and nozzles may vary in operation and layout from station to station, and hydrogen storage may be located either on site or in truck trailers.

WARNING

Hydrogen inside refueling lines is under very high pressure. Do not cut hydrogen refueling lines.

Extricating Occupants

If occupants must be accessed by cutting the fuel cell electric truck, pay special attention to the location of structural reinforcements, fuel system, and high voltage electrical system components.

Do not breach or cut into the high voltage and high pressure hydrogen gas areas outlined in the image.

Towing a Damaged Fuel Cell Electric Truck

Towing the fuel cell electric truck with a flatbed trailer is the preferred method. Towing with a flatbed trailer requires a 53' removable gooseneck trailer (required 12"-18" deck height and 29' clear deck length). The front of the truck should be secured to the trailer using tow hooks and chains, as pictured below. Secure the vehicle to the trailer with chains and ensure clearance before attaching the gooseneck. Safely secure ramping or blocks to the trailer with appropriate straps.

Secure the rear of the fuel cell electric truck with DOT approved series 7 chains, tied down at 45 degree angles to the rear axles, as pictured below.

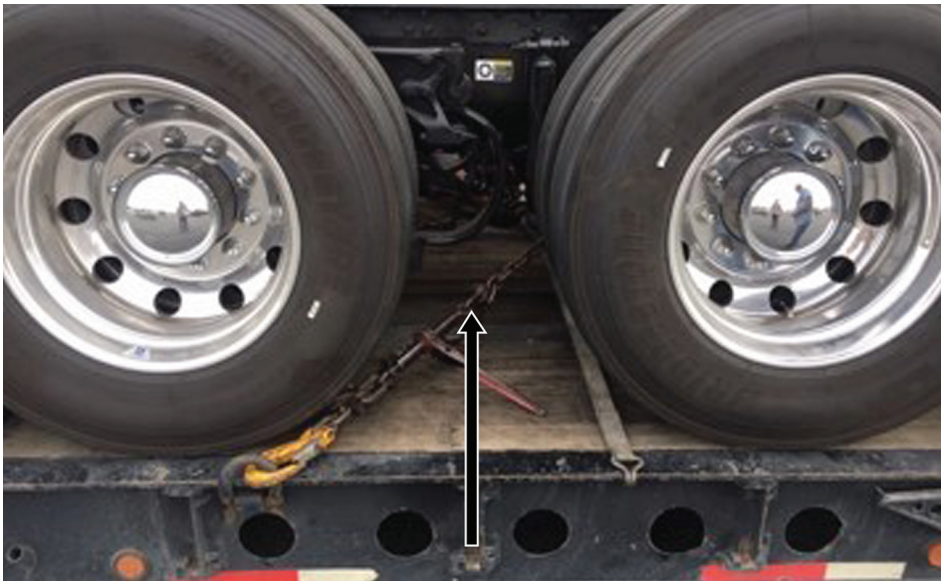

Use a 4-point tie down with ratchet binders and deplete the air in the reservoirs to lower the suspension. Do not chain to the frame rails, 5th wheel, or catwalk, and do not chain in between dual wheels. Inadequate, broken, or damaged chains/tie downs must not be used, and no parts should be disconnected or removed.

If a flatbed trailer is unavailable for towing, make sure the shifter is set to “N”, and disable the parking brakes. Recovery hitches and rigging should be installed on the truck prior to attempting to tow the fuel cell electric truck.

Use a double chain or cable setup that distributes the load equally in both hitches. Never loop a single chain or cable through both hitches. To avoid high voltage system damage, the driveshaft should be disconnected before towing the fuel cell electric truck, and the battery disconnects should be in the “OFF”, or disconnected, position.

NOTICE

If a flatbed trailer is unavailable for towing, heavy-duty fuel cell electric trucks must be towed facing forward with the front wheels off the ground due to aerodynamic and stability concerns.

If there is not sufficient air pressure in the system, the spring brakes may need to be manually released to move the truck. Please refer to the Owner’s Manual for the specific procedures for manually releasing the spring brakes.

WARNING

- Do not disassemble a spring brake chamber. These chambers contain a powerful spring that is compressed. Sudden release of this spring may result in personal injury or death.
- Releasing the spring brakes on an unsecured truck could lead to an accident. The truck could roll, which may result in personal injury, death, equipment, or property damage. Always secure the truck with wheel chocks, chains, or other safe means to prevent rolling before manually releasing the spring brakes.

NOTICE

The Owner’s Manual and/or the Technology and Maintenance Council’s information on heavy-duty truck recovery and towing should be consulted for further information related to general towing procedures for heavy duty trucks.

Towing with High Voltage Battery

Towing on a flatbed trailer, the preferred method, helps ensure there is no damage to the high voltage system. If a trailer is unavailable for towing, make sure the battery disconnects are turned to the “OFF”, or disconnected, position. Tow with the truck facing forward and front wheels off the ground. If towing the truck with all four wheels on the ground is unavoidable, only tow it for a short distance in a forward direction at a low speed (below 18 mph).

NOTICE

Serious damage could occur if towing with the driveline connected (high voltage system + driveline components). Lift the drive wheels off the ground or remove the drive axle before towing.

Storing A Damaged Fuel Cell Electric Truck

Because the fuel cell electric truck contains high voltage and hydrogen fuel systems, special care must be taken when storing a damaged truck. When the person(s) in charge of handling the damaged truck are away, display “HIGH VOLTAGE DO NOT TOUCH” and “HIGH PRESSURE GAS DO NOT TOUCH” signs to warn others (print and use page the pages at the end of this section).

High Voltage System

WARNING

A high voltage battery may cause a vehicle fire for some time after storage due to possible short circuits resulting from collision or electrical corrosion. To store a truck equipped with a high voltage battery, choose a well-ventilated place at least 15 meters (49.2 feet) away from other objects.

In addition to the normal procedures for storing a damaged truck, remove the service plug from the high voltage battery before storing a damaged fuel cell electric truck.

The batteries are installed behind a cover outside the cabin at the lower rear corners.

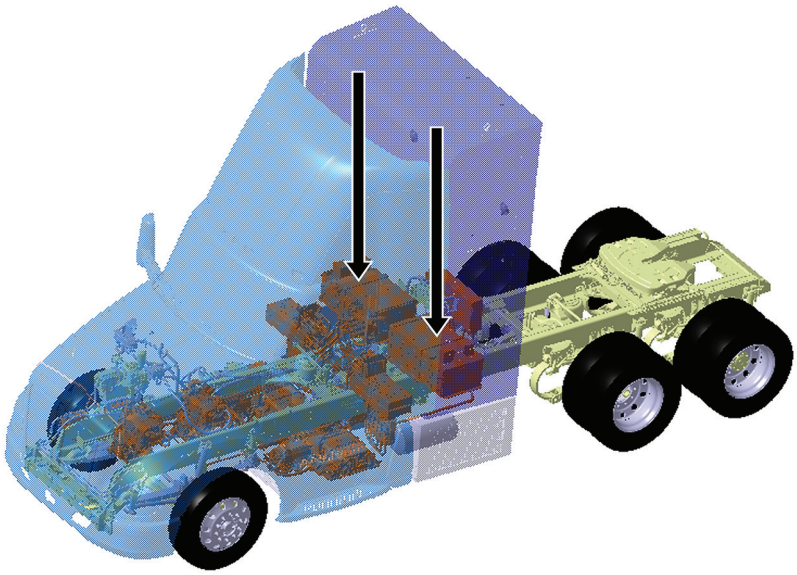

NOTE

- Use a cordless impact driver to remove the high voltage battery panel.
- There are 4 bolts on each side of the panel and 2 bolts in the middle of the panel.

There are 2 service plugs (300 V) located on top of each battery. Pull up to remove service plugs.

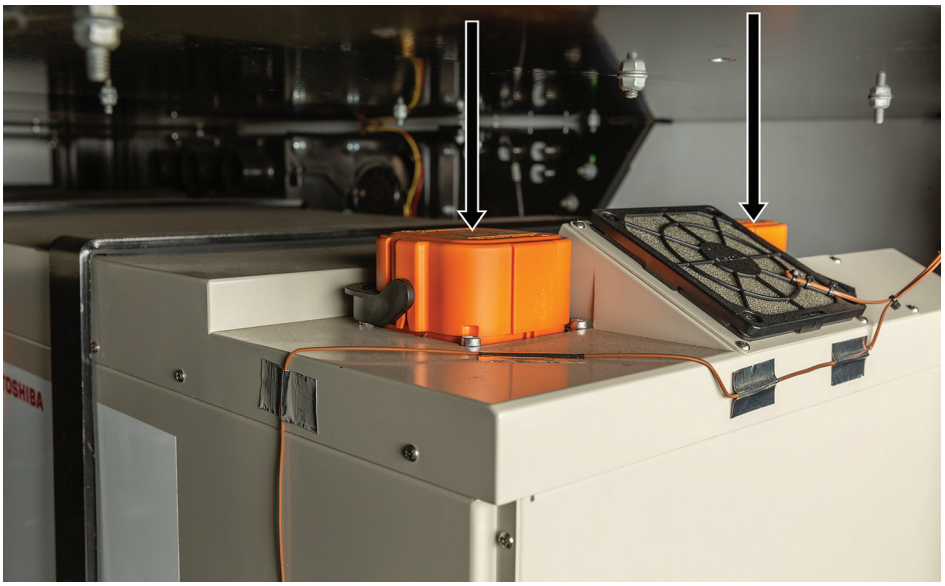

Hydrogen System

In addition to the normal procedures, remove the service plug (300V) from the fuel cell stacks before storing a damaged truck.

The fuel cell stacks are installed under the floor of the truck. The fuel cell stacks are accessed by opening and removing the panel and/or fairing of the compartment directly below the driver and passenger doors.

Pull up to disconnect the service plugs.

WARNING

- The service plug is a high voltage component. Touching it without appropriate protective equipment may result in serious injury or death from severe burns and electric shock from the high voltage electrical system. Wear appropriate protective equipment such as insulated gloves when touching the service plug.
- To prevent serious injury or death from severe burns or electric shock, avoid touching, cutting, or breaching any orange high voltage power cable or high voltage component. Wear appropriate protective equipment such as insulated gloves when there is a risk of touching high voltage power cables or high voltage components.

CAUTION:

HIGH-VOLTAGE

DO NOT TOUCH.

Person in charge:

CAUTION:

HIGH-VOLTAGE

DO NOT TOUCH.

Person in charge:

CAUTION:

HIGH-PRESSURE GAS

DO NOT TOUCH.

Person in charge:

CAUTION:

HIGH-PRESSURE GAS

DO NOT TOUCH.

Person in charge:

INDEX

BULLETIN » Submerged Hybrid / Electric Vehicles

Courtesy of joeynick/iStock/Thinkstock

Emergency responders face many hazards when working with vehicles that have been submerged in water, particularly with a hybrid or electric vehicle. Understanding common safety issues with these vehicles can help keep responders safe.

Emergency Responder Safety Guidance

Hybrid, electric, and fuel cell vehicles are designed to be safe in water, even when fully submerged. The High Voltage (HV) system is isolated from the chassis and is designed to NOT pose a shock and NOT energize the surrounding water.

WARNINGS

- Never remove a submerged service disconnect.
- Submersion in water (especially salt water) can damage low and high voltage components. Although not a common occurrence, this could result in an electrical short and potential fire once the vehicle is no longer submerged.
- Damaged HV batteries can produce flammable gas. Venting the passenger compartment is recommended once the vehicle is out of the water. Do not store vehicle indoors.

TIPS FOR SAFE RESPONSE PRACTICES

Submerged Vehicles

- Avoid contact with HV components, cabling, or service disconnects on a submerged vehicle.
- If possible, turn the ignition off in a submerged vehicle, but do not attempt any other disabling activities.
- If ignition cannot be turned off, wait until the vehicle is no longer submerged and is drained of water before attempting to disable it.
- In some instances, small bubbles may be seen coming from an immersed HV battery. This is referred to as micro-bubbling. This DOES NOT indicate a shock hazard and DOES NOT energize the surrounding water.

Previously Submerged Vehicles

- Fire personnel should don full firefighting personal protective equipment (PPE) and self-contained breathing apparatus (SCBA) when working with previously submerged and damaged vehicles.
- Disable vehicle by chocking the wheels, placing the gearshift in park, and removing the ignition key and/or disconnecting the 12V battery.
- Avoid contact with a damaged HV battery; a significant shock hazard may exist. An HV battery should always be considered to contain a charge and should never be touched or pried open.
- Do not interact with vehicles exhibiting signs of damaged or overheating HV batteries including leaking fluids, sparks, smoke, bubbling noises, and/or unusual odors. If you detect any of these signs, immediately contact fire personnel.

Additional Resources

- Visit www.evsafetytraining.org for resources to help first responders safely handle emergencies involving alternative fuel vehicles including videos, training, and model-specific guidance for submerged vehicles.
- Learn how to address potential hazards and challenges with NFPA's *Emergency Field Guide*, available free of charge at www.nfpa.org/efv.

ALTERNATIVE FUEL VEHICLES
SAFETY TRAINING PROGRAM